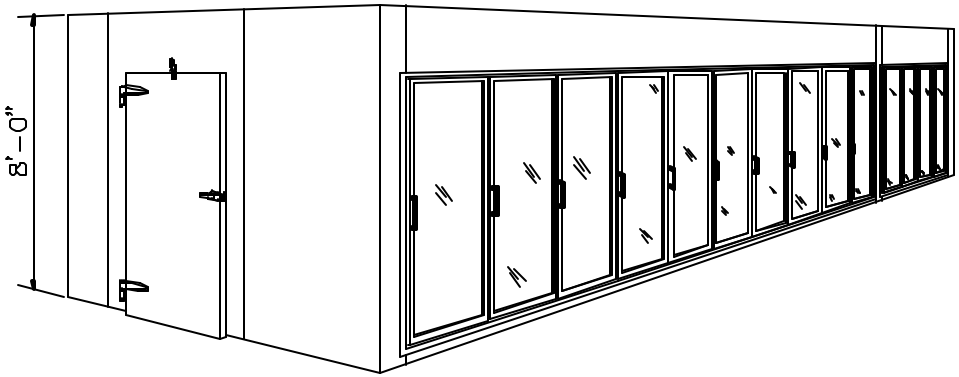

PERSPECTIVE VIEW

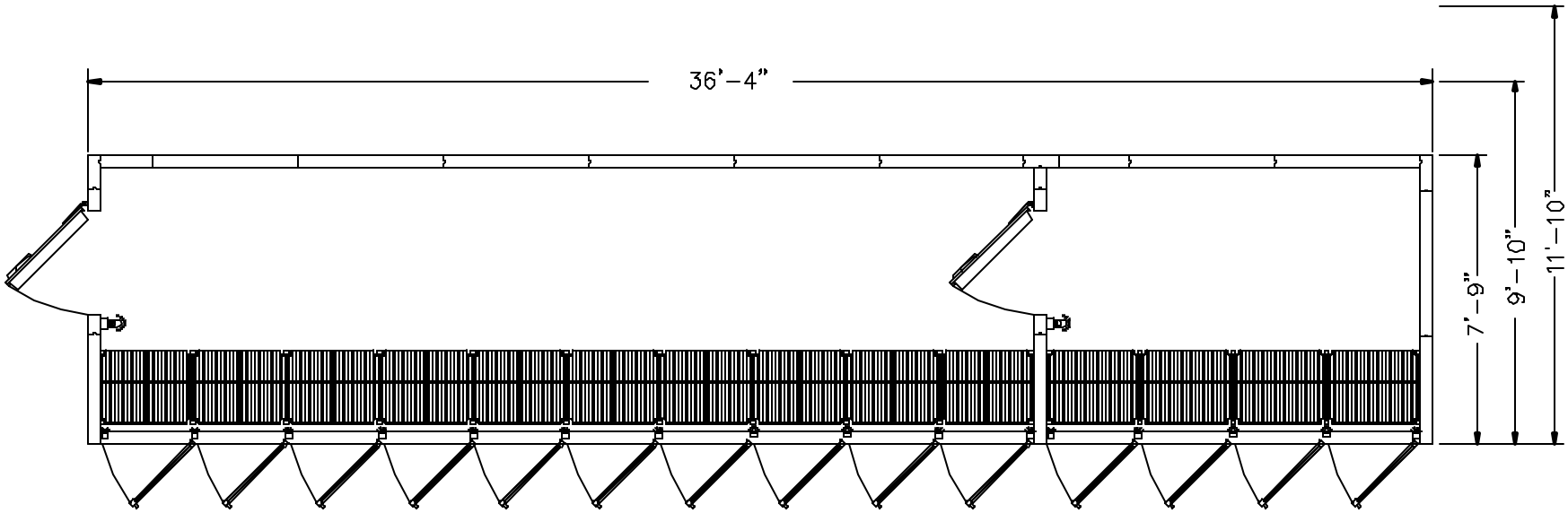

PLAN VIEW

Owner's Approval

6615 Nineteen Mile Road
Sterling Heights MI 48314-2117
PHONE (800) 521-0386 FAX: (586) 254-0485
SRC REFRIGERATION
Refrigeration Specialists

REVISIONS

SALESPERSON

DRAWN BY

S. BREJNAK

DATE

MODEL NUMBER

WDS-BCF36x8

JOB NUMBER